USN. [ ][ ][ ][ ][ ][ ][ ][ ][ ][ ] **[22ME32]**

THIRD SEMESTER B. TECH EXAMINATION, DECEMBER - 2023

COMPUTER AIDED MACHINE DRAWING

Time: 3 Hours **Maximum Marks: 70**

Instructions: **i.** Answer **all the** Questions.

ii. Missing data may be suitably assumed.

PART A

1. a. A square prism base 40 mm side, axis 80 mm long, has its base on the H.P. and its faces equally inclined to the V.P. It is cut by a plane, perpendicular to the V.P., inclined at 60º to the H.P. and passing through a point on the axis, 55 mm above the H.P. Draw its front view and sectional top view. **10**

OR

b. A triangular pyramid, base 40mm sides and axis 60mm long, resting on its base on the HP with one of its edges parallel to the VP. A section plane passing through one of the base corners of the pyramid and the two slant edges at 20mm and 30mm above HP cuts the pyramid. Draw the front view, sectional top view and true shape of the section. Determine the inclination of the section plane with the reference plane. **10**

2. The pictorial view of a machine Part is shown in figure below. Draw the following views: **10**

i. Front View and

ii. Side View and

iii. Top view.

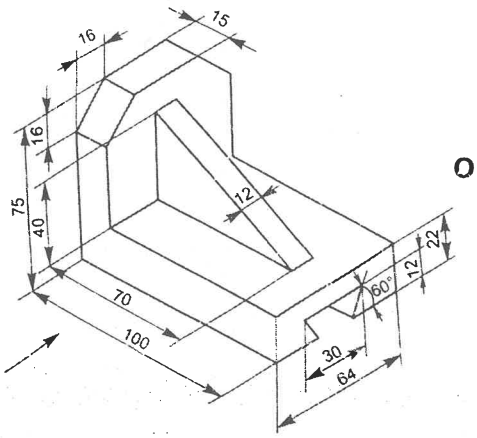

OR

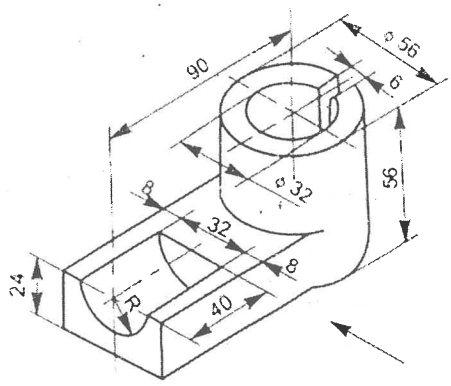

3. a. Draw the sectional front view and top view of a single riveted lap joint-chain riveting to connect two plates of 10mm thick. Use snap heads. Show all the calculations and mark all the dimensions **10**

OR

b. Draw the three views of ISO threaded hexagonal bolt 100mm long, 20mm diameter and a thread length of50mm and hexagonal nut assembly in the axis horizontal position. Indicate all the proportions and the actual dimensions. **10**

PART B

5. The details of a Plummer block are shown in Figure 1. Draw the following views of the assembled vice to 1:1 scale. **40**

i. Front view.

ii. Top view with one half in section

iii. Left view

OR

6. The details of a Screw Jack are shown in Figure 2. Draw the following views of the assembled vice to 1:1 scale. **40**

i. Front view.

ii. Top view with one half in section

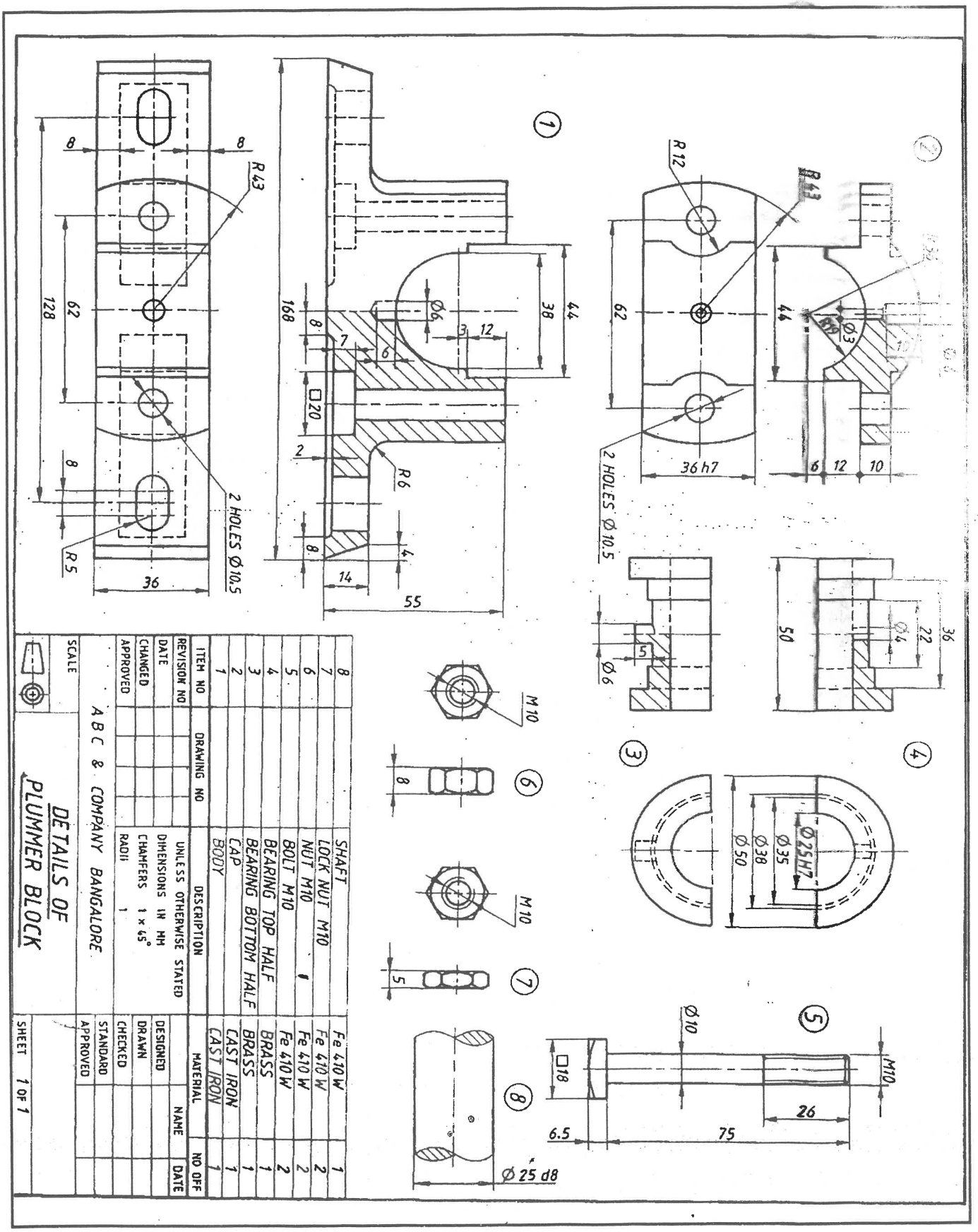
DETAILS OF
PLUMMER BLOCK
A B C & COMPANY BANGALORE
SCALE
SHEET 1 OF 1
ITEM NO
DRAWING NO
DESCRIPTION
MATERIAL
NO OFF
REVISION NO
DATE
CHANGED
APPROVED
UNLESS OTHERWISE STATED
DIMENSIONS IN MM
CHAMFERS 1 x 45°
RADII 1
DESIGNED
DRAWN
CHECKED
STANDARD
APPROVED
NAME
DATE
8 SHAFT Fe 410 W 1
7 LOCK NUT M10 Fe 410 W 2
6 NUT M10 Fe 410 W 2
5 BOLT M10 Fe 410 W 2
4 BEARING TOP HALF BRASS 1
3 BEARING BOTTOM HALF BRASS 1
2 CAP CAST IRON 1
1 BODY CAST IRON 1
2 HOLES Ø 10.5
36 h7
Ø 25 H7
Ø 25 d8
M10

Fig. 2

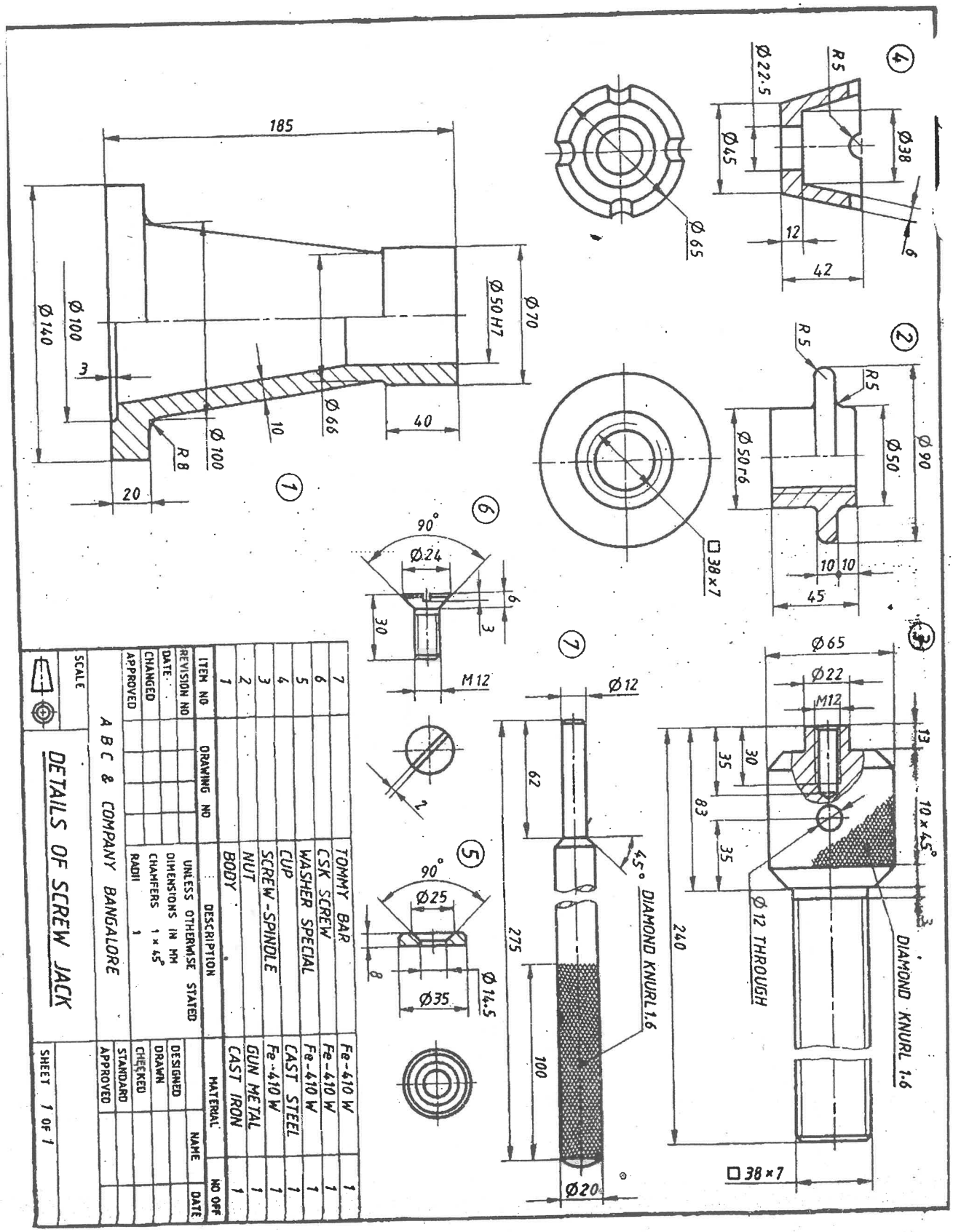
185
Ø 140
Ø 100
3
20
R 8
Ø 100
10
Ø 66
40
Ø 50 H7
Ø 70
1
Ø 22·5
R 5
Ø 45
Ø 38
12
42
6
4
Ø 65
R 5
R 5
Ø 50 r6
Ø 50
Ø 90
10 10
45
2
□ 38 × 7
Ø 65
Ø 22
M12
13
10 × 45°
35
30
83
35
Ø 12 THROUGH
DIAMOND KNURL 1·6
240
□ 38 × 7
3
90°
Ø 24
6
3
30
M12
6
2
90°
Ø 25
8
Ø 35
Ø 14·5
7
Ø 12
62
45° DIAMOND KNURL 1.6
275
100
Ø 20
7 TOMMY BAR Fe-410 W 1
6 CSK SCREW Fe-410 W 1
5 WASHER SPECIAL Fe-410 W 1
4 CUP CAST STEEL 1
3 SCREW-SPINDLE Fe-410 W 1
2 NUT GUN METAL 1
1 BODY CAST IRON 1
ITEM NO DRAWING NO DESCRIPTION MATERIAL NO OFF
REVISION NO
DATE
CHANGED
APPROVED
UNLESS OTHERWISE STATED
DIMENSIONS IN MM
CHAMFERS 1 × 45°
RADII 1
NAME
DATE
DESIGNED
DRAWN
CHECKED
STANDARD
APPROVED
SCALE
A B C & COMPANY BANGALORE
DETAILS OF SCREW JACK
SHEET 1 OF 1

Figure 2